DIMENSIONS IN MILLIMETRES (mm) UNLESS OTHERWISE STATED
TOLERANCES EXCEPT WHERE OTHERWISE STATED ± 0.25mm
NON-CONTROLLED UNLESS STAMPED OTHERWISE.

First angle projection

QCF60 ISSUE 3

GENERAL ARRANGEMENT OF OS50/510 – OS50/1300 OPEN SPRING MOUNTINGS

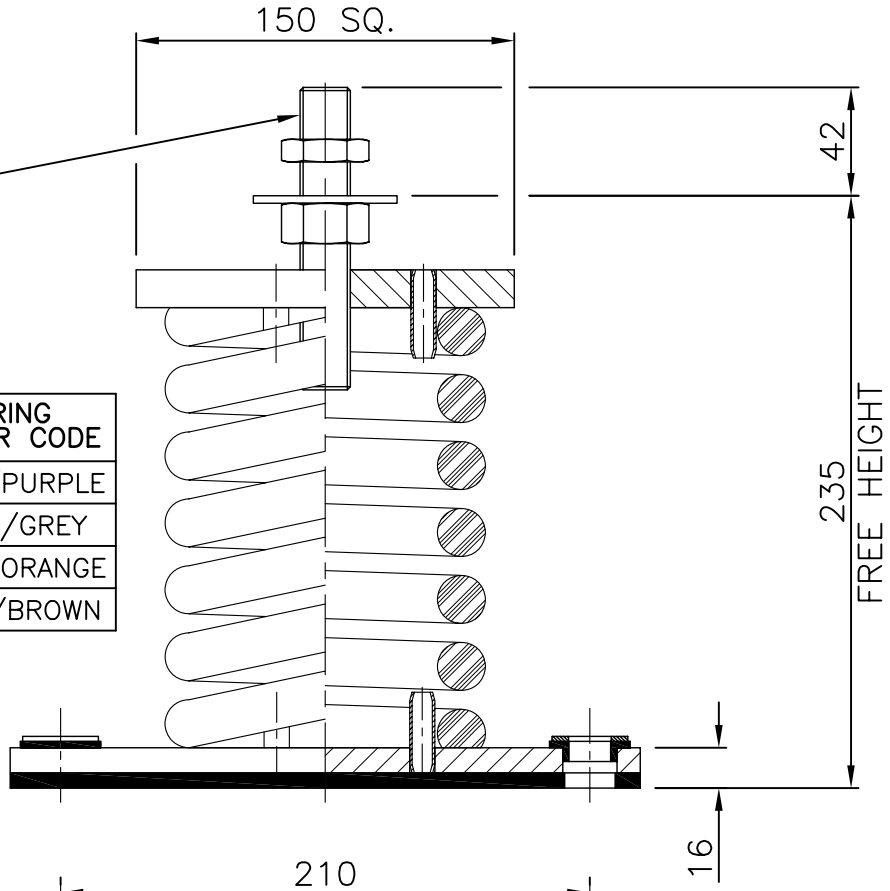

STANDARD PART No.	SPRING COLOUR CODE
OS50/510	BLACK/PURPLE
OS50/760	BLACK/GREY
OS50/1000	BLACK/ORANGE
OS50/1300	BLACK/BROWN

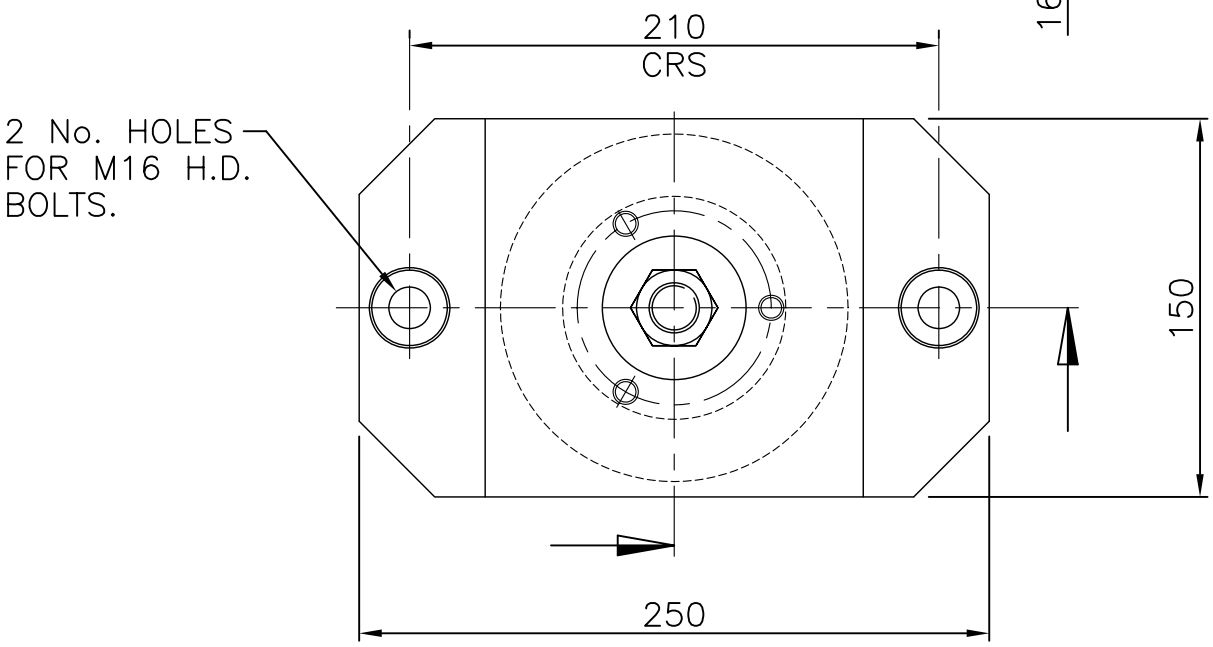

FOR GENERAL DETAILS SEE CHRISTIE & GREY LEAFLET No. PL024.
FOR INSTALLATION INSTRUCTIONS REFER TO CHRISTIE & GREY DATA SHEET DS 027.

Drawing No.	A	B	C	D		Job No.	
S187	11/02/03	09/07/04	02/11/05	20/04/11		Scale	N.T.S.
						Drawn	M.W.
Change note No.		139	138	047		Checked	A.N.M.

CHRISTIE & GREY
Engineers in vibration, noise and shock control.
Christie & Grey
Morley Road, Tonbridge,
Kent, TN9 1RA England