DIMENSIONS IN MILLIMETRES (mm) UNLESS OTHERWISE STATED
TOLERANCES EXCEPT WHERE OTHERWISE STATED ± 0.25mm
NON-CONTROLLED UNLESS STAMPED OTHERWISE.

First angle projection

QCF60 ISSUE 3

GENERAL ARRANGEMENT OF ORS50/100 – ORS50/500
OPEN RESTRAINED SPRING MOUNTINGS

PART No.	COLOUR CODE
ORS50/100	YELLOW
ORS50/200	GREEN
ORS50/300	BLUE
ORS50/400	WHITE
ORS50/500	RED/BLACK

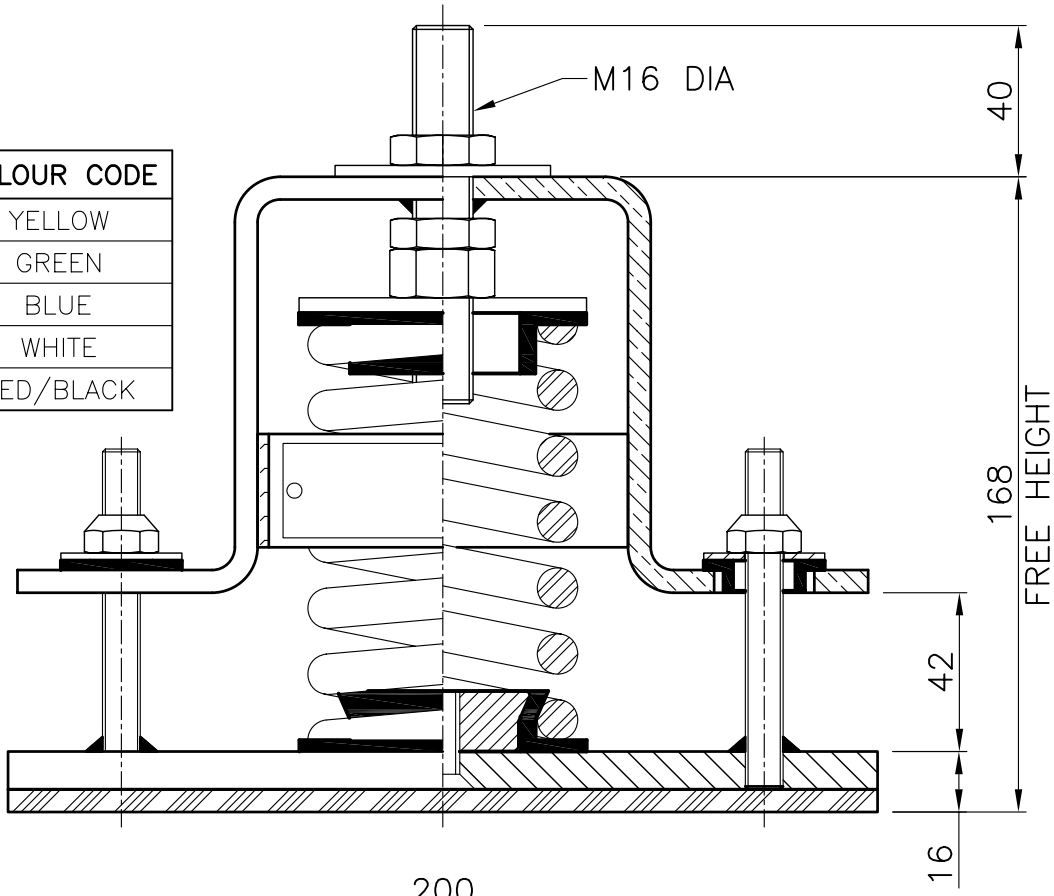

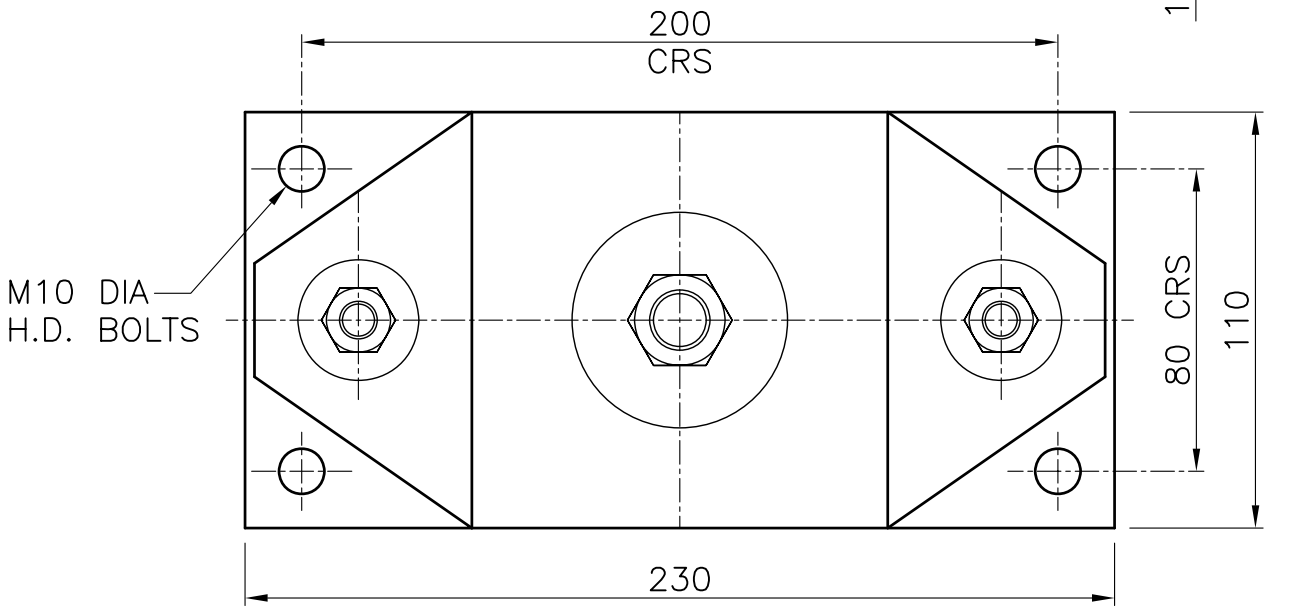

FOR GENERAL DETAILS SEE CHRISTIE & GREY LEAFLET PL005.
FOR INSTALLATION INSTRUCTIONS SEE CHRISTIE & GREY
DATA SHEET DS 025.

Drawing No.	A	B	C	D		Job No. –
S 128	11/10/99	02/08/04	02/11/05	20/04/11		Scale 1 : 2
						Drawn D.H
Change note No.		172	138	047		Checked A.R.B

CHRISTIE & GREY
Engineers in vibration, noise and shock control.
Christie & Grey
Morley Road, Tonbridge,
Kent, TN9 1RA England