DIMENSIONS IN MILLIMETRES (mm) UNLESS OTHERWISE STATED
TOLERANCES EXCEPT WHERE OTHERWISE STATED ± 0.25mm
NON-CONTROLLED UNLESS STAMPED OTHERWISE.

First angle projection

QCF60 ISSUE 3

GENERAL ARRANGEMENT OF 10.104.45 – 10.104.70 GENFLEX MARINE 'B' RANGE RUBBER MOUNTINGS

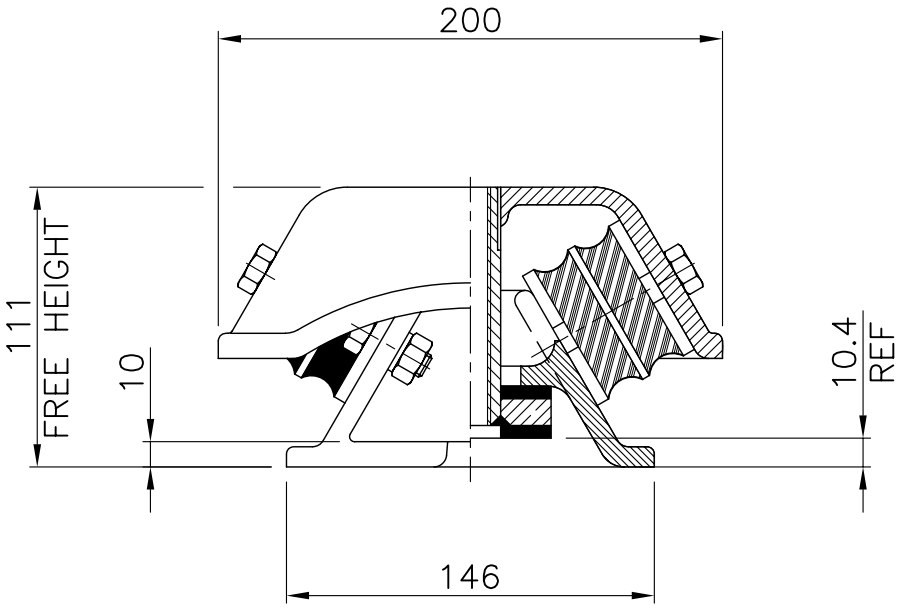

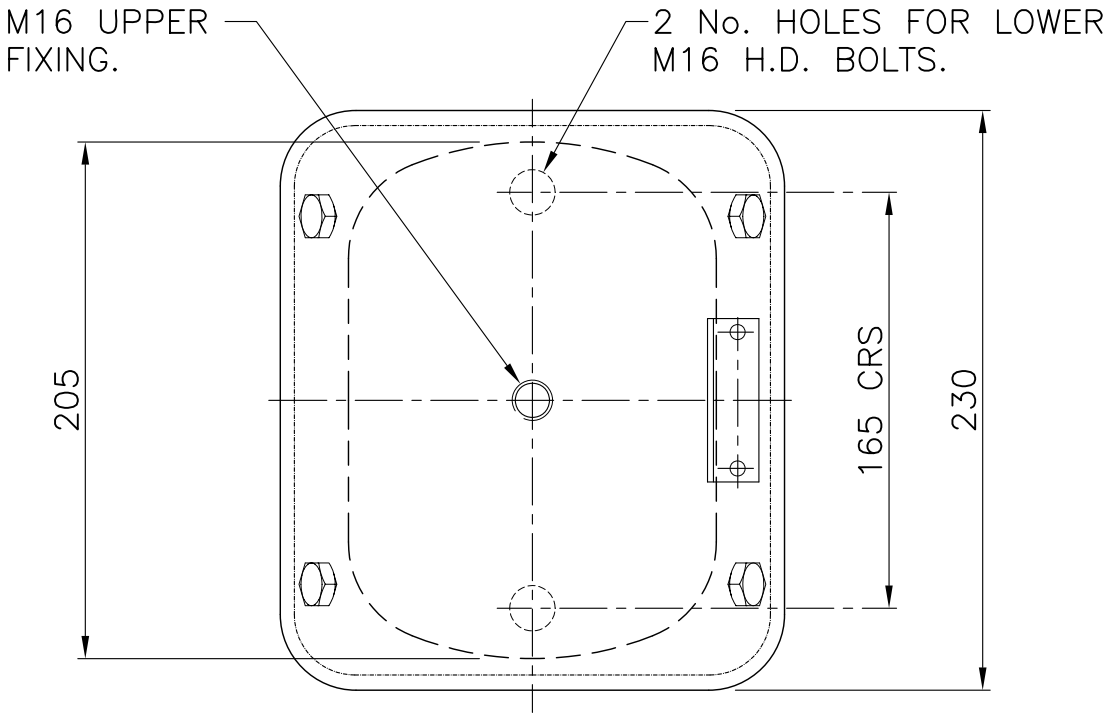

FOR GENERAL DETAILS SEE CHRISTIE & GREY LEAFLET PL002.
FOR INSTALLATION INSTRUCTIONS SEE CHRISTIE & GREY DATA SHEET DS 010.

Drawing No.	A	B	C	D		Job No.	
S139	22/11/99	05/03/04	02/11/05	20/04/11		Scale	N.T.S.
						Drawn	D.H
Change note No.		040	138	047		Checked	A.R.B

CHRISTIE & GREY
Engineers in vibration, noise and shock control.
Christie & Grey
Morley Road, Tonbridge,
Kent, TN9 1RA England